IDEM - MULTIFUNCTIONAL UGB-KLTM ACCESS DEVICE

525001
UGB2-KLTM-RFID - Manual Override



- Locking force F1Max = 3000N
- PL e Cat. 4
- An escape option
- Version for 2 or 4 buttons (lights, switches, e-stop)
- Built-in KLTM circuit breaker with RFID coding

PRODUCT DESCRIPTION

UGB-KLTM is a multifunctional device that provides integrated protection and comprehensive access control. The product is intended for applications in which the operator has full access to a dangerous zone.
The switch is available in a cast metal version. In addition, the switch can have 2 or 4 buttons (lamps, switches) that can be freely configured. The UGB-KLTM multifunctional access device is coded with RFID, which ensures the highest level of interference immunity in accordance with the requirements of ISO14119.

SPECIFICATIONS

Approvals	ISO 13849-1, ISO 14119, EN60204-1, EN62061, EN60947-5-1, UL 508
Conduit entry	M20
Holding force (F1Max)	3000
Integrated LED indication	Yes
IP Class	IP65
Maximum approach / withdrawal speed	600
Mounting	4 x M5
Operating temperature	-25°C ... +40°C
PFHd	4,77 x 10^-10
PL	e
Rated insulation voltage	600 V AC
SIL	3
Solenoid Voltage	24V dc
Travel for positive opening	10
Weight	1980
Withstand voltage	2500 V AC

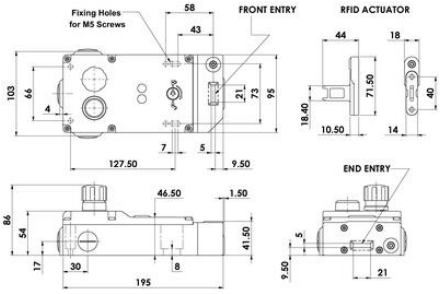
Fixing Holes
for M5 Screws
58
43
FRONT ENTRY
RFID ACTUATOR
44
18
103
66
4
21
73
95
71.50
18.40
40
10.50
14
7
5
127.50
9.50
END ENTRY
46.50
1.50
86
54
41.50
5
17
30
8
195
9.50
21

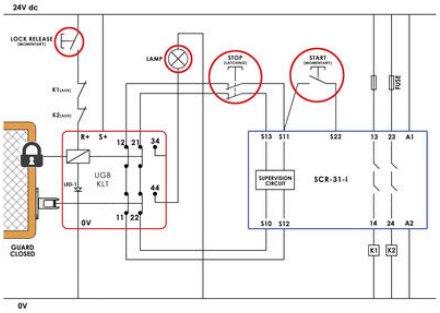
24V dc
LOCK RELEASE
LAMP
STOP
START
K1
K2
FUSE
R+
S+
12
21
34
UGB
KLT
44
11
22
0V
S13
S11
S22
13
23
A1
SUPERVISION
CIRCUIT
SCR-31-i
S10
S12
14
24
A2
K1
K2
GUARD
CLOSED
0V

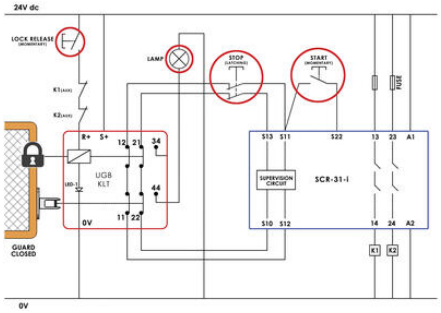
24V dc
LOCK RELEASE
LAMP
STOP
START
K1
K2
FUSE
R+
S+
12
21
34
UGB
KLT
44
11
22
0V
S13
S11
S22
13
23
A1
SUPERVISION
CIRCUIT
SCR-31-i
S10
S12
14
24
A2
K1
K2
GUARD
CLOSED
0V