IDEM - INTERLOCKS FOR GBL-1 & GBA-1 KEY SWITCHES

210001
GBL-1 Gate Bolt Lock Left Hand (KLP KLM KL4-SS)



- Suitable for KM, KLP, KLM, KLM-RR, KL4-SS
- An escape option

PRODUCT DESCRIPTION

The interlock for key switches GBL-1 or GBA-1 can be mounted on hinged or sliding gates to prevent the machine from starting when the operator is in the middle. It is available in two sizes for smaller and larger circuit breakers and with a handle mounted on the left or right side. Optionally, an escape release lever can be used for key or locking switches. If an escape release lever is used, the locking switches must have a mechanical release (RR) function.
The lock is designed for use with KM key switches and with interlock switches: KLP, KLM, KLM-RR, KL4-SS.

SPECIFICATIONS

Mounting	4 x M6
Weight	1870

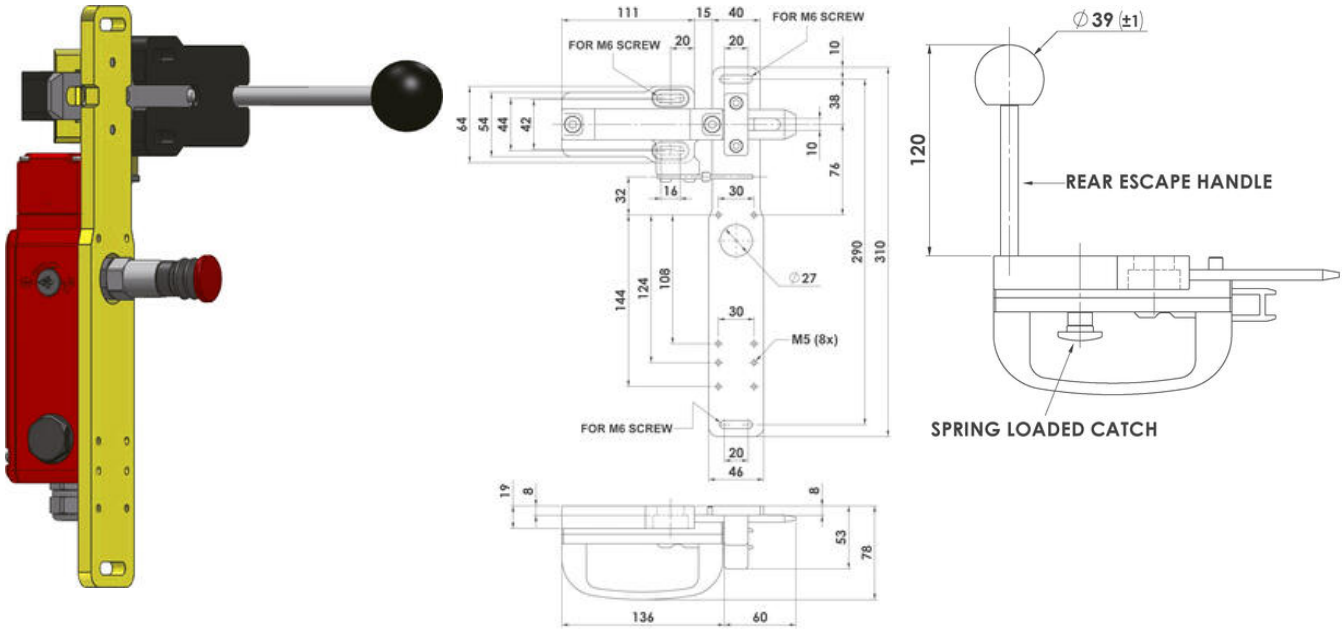

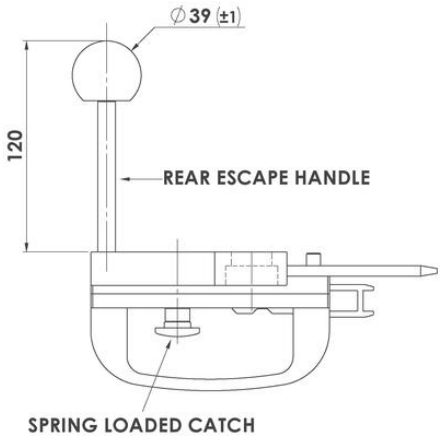
∅39 (±1)
120
REAR ESCAPE HANDLE
SPRING LOADED CATCH