SURFACE MOUNTED SIREN BU1/ PANEL MOUNTED BUZZER BU2/BU3

BU1, BU2 and BU3 series

B100520313
Beacon Buzzer Pnl Mtd 230/240v AC BU2

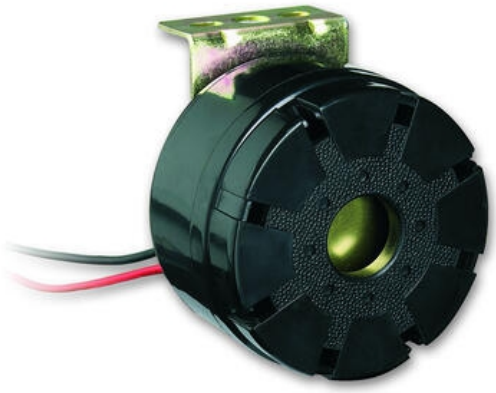

- High noise level 108 dB
- IP66 embedded cable
- Adjustable sound level in the front approx. 10 dB (BU2/BU3)

PRODUCT DESCRIPTION

Small panel mounted buzzer with flat terminal connection. The sound is easily adjusted through a window at the front and the sound can be trimmed up to approx. 10 dB

SPECIFICATIONS

Color House	Black
Diameter	43
IP Class	IP54
Nominal current max	0.02
Nominal current min	0.02
Number of tones	1
Operating Voltage AC Max	240
Operating Voltage AC Min	180
Sound control	Yes
Sound level max	90
Sound level min	80
Temperature range from	-20
Temperature range to	70
Tone frequency max	3500
Tone frequency min	2500
Weight	35

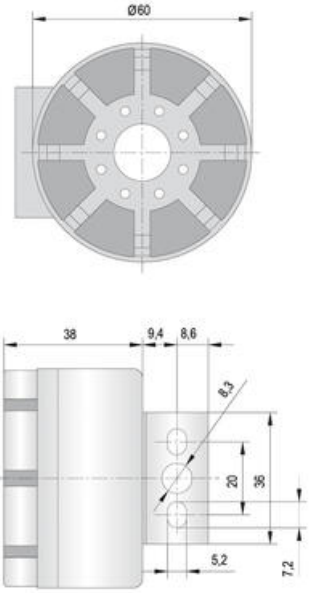
Ø60
38
9,4
8,6
8,3
20
36
5,2
7,2

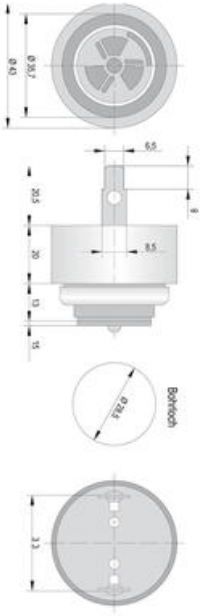
Ø 43
Ø 35,7
6,5
9
20,5
20
8,5
13
15
Bohrloch
Ø 8,4
3,2

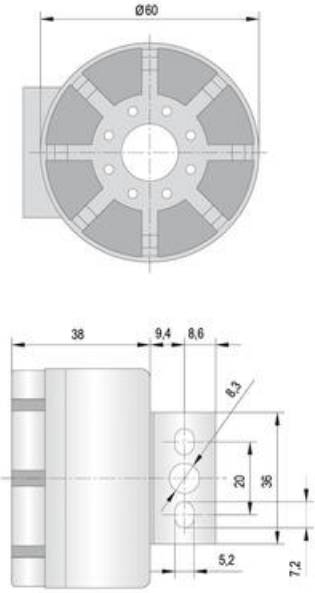
Ø60
38
9,4
8,6
8,3
20
36
5,2
7,2

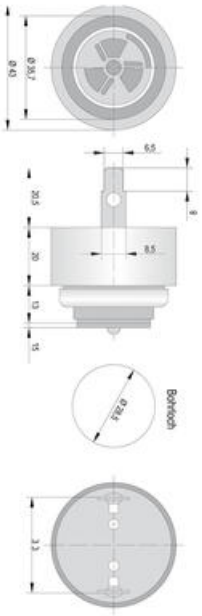
Ø 43
Ø 35,7
6,5
9
20,5
20
8,5
13
15
Bohrloch
Ø 8,4
3,2