AUER - ELECTRONIC MULTI-SIREN ES1-ES2

ES1/ES2 series

C115600113
Beacon Siren Multitone 110/230v AC ES2



- 32 selectable tones
- IP65
- 86–106 dB

PRODUCT DESCRIPTION

ES1/ES2 is a cost effective siren with 32 selectable tones. The volume and tone selection are set by dip-switches. IP 65 makes it suitable for mounting both indoors and outdoors.

SPECIFICATIONS

Color House	Red RAL 3000
Diameter	105
IP Class	IP65
Nominal current max	0.035
Nominal current min	0.006
Number of tones	32
Operating Voltage AC Max	230
Operating Voltage AC Min	120
Power consumption max	0.012
Sound control	Yes
Sound level max	107
Sound level min	77
Temperature range from	-20
Temperature range to	70
Terminal connection	2.5
Tone frequency max	2850
Tone frequency min	440
Weight	295

The sound pressure decreases by 6 dB when doubling the distance; the following distance table is to be seen as Indication, as also factors like tone type, wind speed, wind direction, humidity, weather conditions etc. do influence the sound pressure level.

Distance (m)	Sound pressure dB (A)																			
1	65	70	75	80	85	90	92	94	96	98	100	102	104	106	108	110	112	114	116	118	120
2	59	64	69	74	79	84	86	88	90	92	94	96	98	100	102	104	106	108	110	112	114
3	55	60	65	70	75	80	82	84	86	88	90	92	94	96	98	100	102	104	106	108	110
5	51	56	61	66	71	76	78	80	82	84	86	88	90	92	94	96	98	100	102	104	106
10	45	50	55	60	65	70	72	74	76	78	80	82	84	86	88	90	92	94	96	98	100
20	39	44	49	54	59	64	66	68	70	72	74	76	78	80	82	84	86	88	90	92	94
30	35	40	45	50	55	60	62	64	66	68	70	72	74	76	78	80	82	84	86	88	90
50		36	41	46	51	56	58	60	62	64	66	68	70	72	74	76	78	80	82	84	86
100				40	45	50	52	54	56	58	60	62	64	66	68	70	72	74	76	78	80
200					39	44	46	48	50	52	54	56	58	60	62	64	66	68	70	72	74
500							38	40	42	44	46	48	50	52	54	56	58	60	62	64	66

The sound pressure decreases by 6 dB when doubling the distance

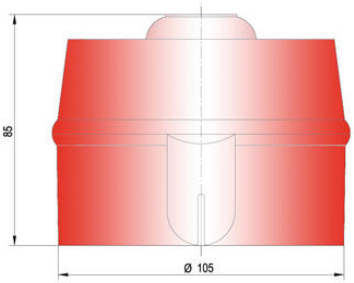

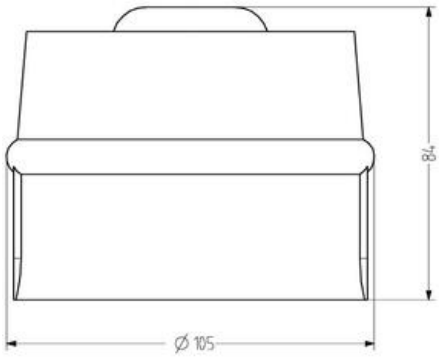

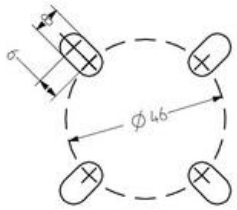

Tone table

ES2

No.	Tone	DIP switch	2nd stage alarm [Hz]
1	Warble tone 800/1000 Hz @ 0.5 sec	11111	800
2	Warble tone 800/1000 Hz @ 0.25 sec	01111	1.000
3	Interrupted tone 800 Hz @ 0.5 sec on/off	10111	800
¼	Interrupted tone 1000 Hz @ 0.25 sec on/off	00111	1.000
5	Slow Whoop 500-1200 Hz in 3 sec then 0.5 sec off	11011	500
6	Slow Whoop 1200-500 Hz in 3 sec then 0.5 sec off	01011	1.200
7	Australian Slow Whoop 500-1200 Hz in 3.5 sec, 0.25 sec off	10011	500
8	L.F. Sweep frequency 800-1000 Hz in 0.5 sec	00111	800
9	L.F. Sweep frequency 800-1000 Hz in 0.25 sec	11101	800
10	L.F. Sweep frequency 800-1000 Hz in 0.1 sec	01101	800
11	Sweep frequency 1200-500 Hz in 1 sec	10101	1.200
12	Warble tone 554/440 Hz @ 0.5 sec	00101	554
13	Warble tone 554 Hz for 0.1 sec / 440 Hz for 0.4 sec	11001	554
14	Interrupted tone 660 Hz for 150 msec on/off	01001	660
15	Interrupted tone 660 Hz for 1.8 sec on/off	10001	660
16	Interrupted tone 660 Hz for 570 msec on/off	00001	660
17	Group of 3 interrupted tone 1000 Hz @ 0.5 sec on/off then 1.5 sec off	11110	1.000
18	Group of 2 warble tone 1000/800 Hz @ 0.5 sec then 1.5 sec off	01110	1.000
19	Group of 3 Sweep 500-1200 Hz in 0.5 sec on/off then 1.5 sec off	10110	500
20	Group of 3 sweep 1200-500 Hz in 0.5 sec then 1.5 sec off	00110	1.200
21	Linear frequency sweep 2000-2500 Hz in 0.5 sec	11010	2.000
22	Linear frequency sweep 2000-2500 Hz in 0.25 sec	01010	2.000
23	H.F. warble tone 2000/2500 Hz @ 0.5 sec	10010	2.000
24	H.F. warble tone 2000/2500 Hz @ 0.25 sec	00010	2.000
25	H.F. interrupted tone 2850 Hz @ 150 msec on/off	11100	2.000
26	H.F. interrupted tone 800 Hz @ 0.5 sec on/off	01100	2.850
27	Very fast H.F. sweep 2400-2800 Hz in 20msec (50 Hz)	10100	2x00
28	Fast H.F. sweep 2400-2800 Hz in 0.1+3 sec (7 Hz)	00100	2x00
29	H.F. Sweep 2400-2800 Hz in 0.5 sec (2 Hz)	11000	2x00
30	2 way ramp, 500-1200, rising then falling in 0.25 sec	01000	500
31	Siren 2 way ramp 3 sec rising then 3 sec falling, 500-1200 Hz	10000	500
32	Ding Dong group 2700-0 Hz, then 570-80 Hz off for ¼ sec	00000	700

The sound pressure decreases by 6 dB when doubling the distance; the following distance table is to be seen as Indication, as also factors like tone type, wind speed, wind direction, humidity, weather conditions etc. do influence the sound pressure level.

Distance (m)	Sound pressure dB (A)																			
1	65	70	75	80	85	90	92	94	96	98	100	102	104	106	108	110	112	114	116	118	120
2	59	64	69	74	79	84	86	88	90	92	94	96	98	100	102	104	106	108	110	112	114
3	55	60	65	70	75	80	82	84	86	88	90	92	94	96	98	100	102	104	106	108	110
5	51	56	61	66	71	76	78	80	82	84	86	88	90	92	94	96	98	100	102	104	106
10	45	50	55	60	65	70	72	74	76	78	80	82	84	86	88	90	92	94	96	98	100
20	39	44	49	54	59	64	66	68	70	72	74	76	78	80	82	84	86	88	90	92	94
30	35	40	45	50	55	60	62	64	66	68	70	72	74	76	78	80	82	84	86	88	90
50		36	41	46	51	56	58	60	62	64	66	68	70	72	74	76	78	80	82	84	86
100				40	45	50	52	54	56	58	60	62	64	66	68	70	72	74	76	78	80
200					39	44	46	48	50	52	54	56	58	60	62	64	66	68	70	72	74
500							38	40	42	44	46	48	50	52	54	56	58	60	62	64	66

The sound pressure decreases by 6 dB when doubling the distance