CROUZET SWITCHES - 83 106 DOUBLE BREAKING

83106022
831060 D/BRK W3

- Breaking and terminating contacts
- Spring-loaded or bistable

PRODUCT DESCRIPTION

SPECIFICATIONS

Allowable Operating Force Max	20
Contact gap	0,4 x 2 mm
Hysteresis Max	0.7
IP Class	IP40
Operating Force Max	4
Over Movement My	0.7
Rated current at 250 V AC	5
Return Movement Force Min	1
Sleep Max	12.75
Switching Point	11,45±0,2-0,25
Temperature range from	-40
Temperature range to	85
Thermal current at 250 V AC	17.5

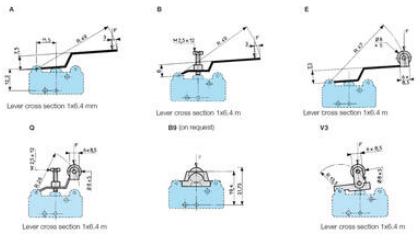

W3 for 6.35 mm clips

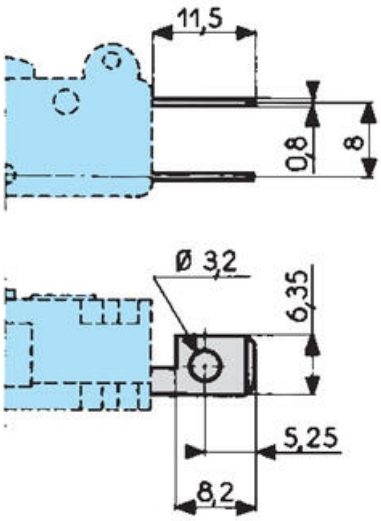

83 106

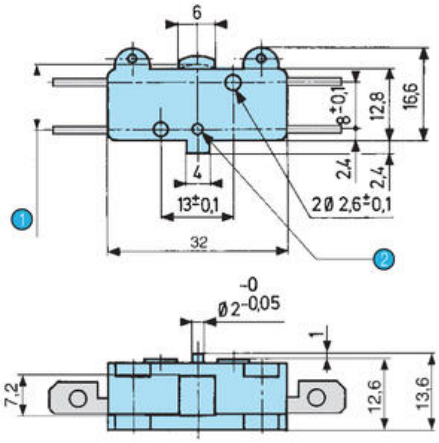

83 106 7

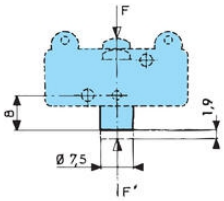

83 106 4

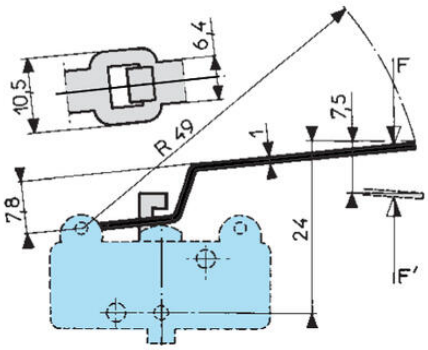

1 OL = 10.65
2 Ø $2^{+0.01}$ $^{+0.65}$ depth1.2

W1 screw

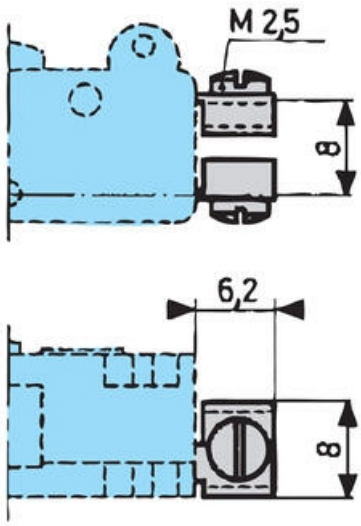

W2 solder

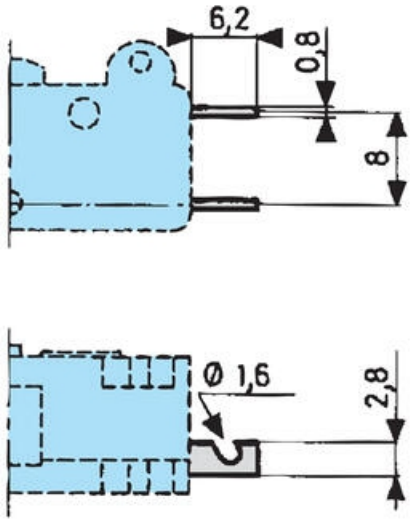

O2
2-pole side mounting plate

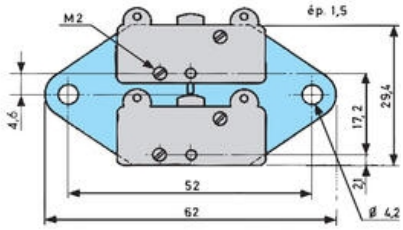

K2 (on request)
2-pole vertical mounting plate

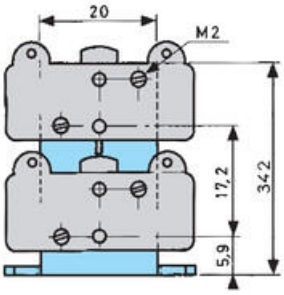

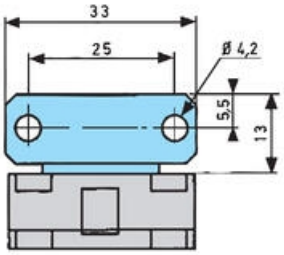

Y (on request)
side plate

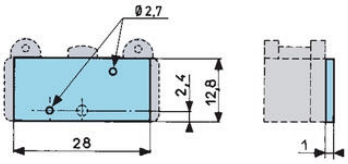

H
Horizontal single pole mounting plate

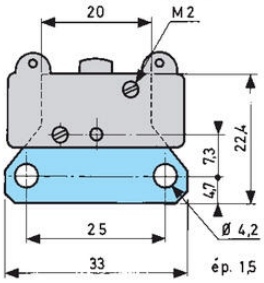

Without indication, the thickness of the plate is 1.5 mm

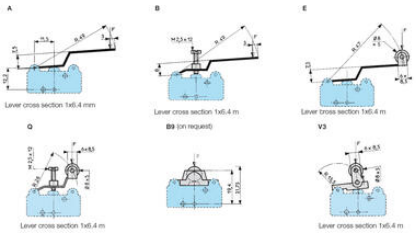

W3 for 6.35 mm clips

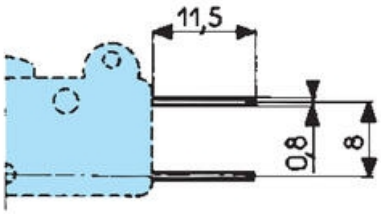

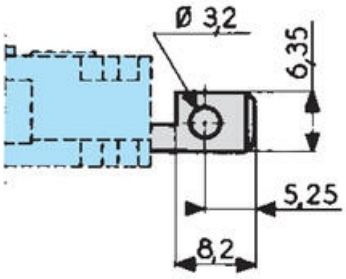

83 106

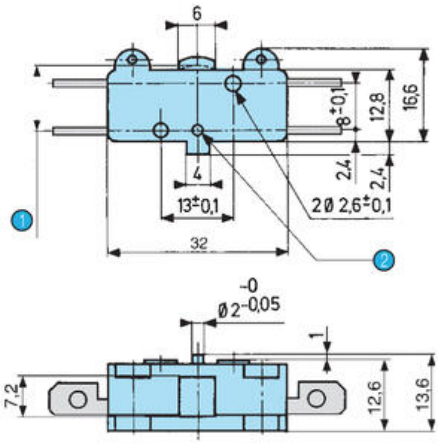

83 106 7

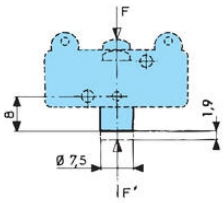

83 106 4

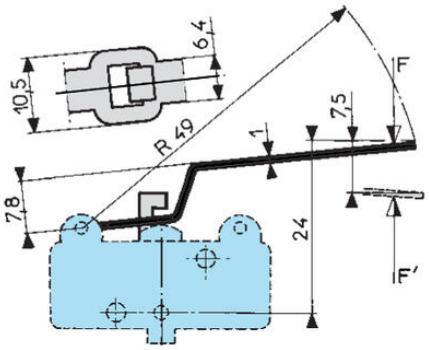

1 OL = 10.65
2 Ø $2^{+0.01}$ $^{+0.65}$ depth1.2

W1 screw

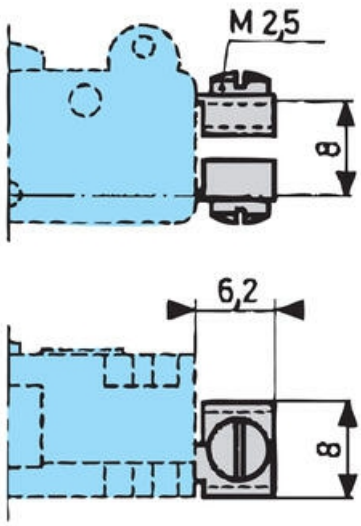

W2 solder

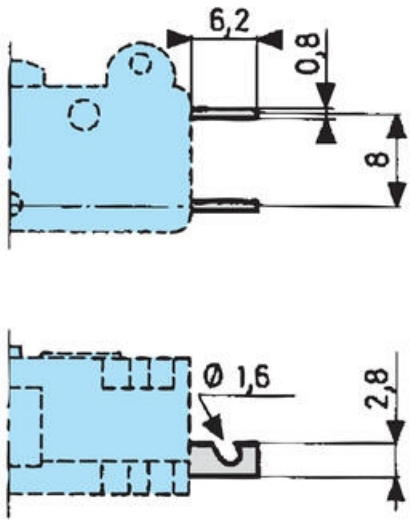

O2
2-pole side mounting plate

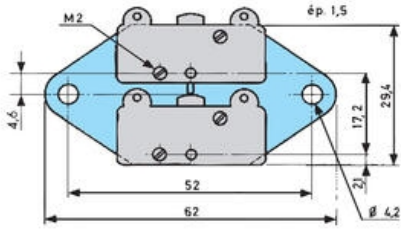

K2 (on request)
2-pole vertical mounting plate

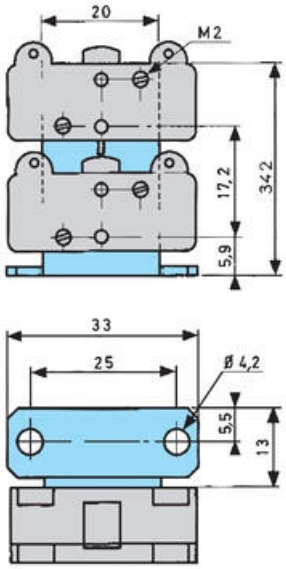

Y (on request)
side plate

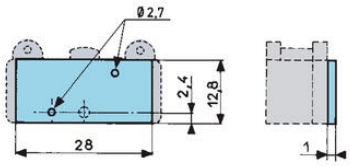

H
Horizontal single pole mounting plate

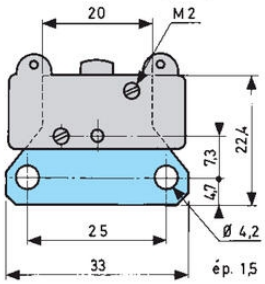

Without indication, the thickness of the plate is 1.5 mm