# POWER SUPPLY 1-PHASE WITH BUILT IN REDUNDANCY, 24 V DC DIMENSION C SERIES, GENERATION 2

CP10.241-R1
Redundant PSU 100-240 V AC/24 V DC, 10 A




- Output current of 10 or 20 A
- Efficiency up to 95.2%
- 20% power reserves
- Built-in decoupling mosfet for 1+1 and n+1 redundancy
- Hot-Swap

## PRODUCT DESCRIPTION

Click below link to download the white paper
Efficient redundancy for power supplies

Also visit our page for Redundancy Modules

The Dimension CP-Series are cost optimized power supplies without compromising quality, reliability and performance. The most outstanding features of the CP20.241–R1/-R2/-R3 units are the high efficiency, electronic inrush current limitation, active PFC, wide operational temperature range and the extraordinary small size. The units include a decoupling MOSFET for building 1+1 or n+1 redundant power supply systems.
These redundancy power supplies come with three connection terminal options; screw terminals, spring-clamp terminals or plug connector terminals which allows replacement on an active application.
CP20.242-R2 version feature an enhanced DC input voltage range and the CP20.241-R2-C1 is additionally equipped with conformal coated pc-boards.
CP10.242-R2 version feature an enhanced DC input voltage range.
With high immunity to transients and power surges, low electromagnetic emission, a DC-OK signal contact for remote monitoring, and a large international approval package, makes this unit suitable for nearly every application.

- AC 100-240V Wide-range Input
- Width only 39 or 48 mm
- Built-in Decoupling Mosfet for 1+1 and n+1 Redundancy
- Efficiency up to 94.7%
- 20% Output Power Reserves
- Safe HiccupPLUS Overload Mode
- Easy Fuse Breaking – 3 times nominal current for 12ms
- Active Power Factor Correction (PFC)
- Minimal Inrush Current Surge
- DC-OK Relay Contact
- Current Sharing Feature Included
- 3 Year Warranty

## SPECIFICATIONS

| | |
|---|---|
| Active Transient | Yes |
| Approvals | ATEX, CE, CSA US, cULus, IECEx |
| DC relay output | Yes |

| | |
|---|---|
| Depth | 117 |
| Effect | 240 |
| Efficiency At 120 V AC, full load. Typical | 93 |
| Efficiency At 230 V AC, full load. Typical | 94.7 |
| Efficiency At 230 V AC. Typical | 93.9 |
| Height | 124 |
| Hold-up time at 120 V AC, full load. Typical. | 37 |
| Hold-up time at 230 V AC, full load. Typical. | 37 |
| Input current at 230 V ac typical | 9 |
| Input voltage AC | 100-240 V |
| Input voltage ac max | 264 |
| Input voltage ac min | 85 |
| Input voltage DC | 110-150 V |
| Input voltage dc max | 180 |
| Input voltage dc min | 88 |
| Input voltage range | Wide-range |
| Inrush current at 120 V ac typical | 6 |
| IP Class | IP20 |
| Lifetime at 120 V ac, full load and +40 ° C | 78000 |
| Lifetime at 230 V ac, full load and +40 ° C | 109000 |
| MTBF (IEC 61709) 230 V AC, Maximum Load, 40 ° C | 641000 |
| Number of phases | 1 |
| Output Current | 10 |
| Output voltage | 24 |
| Output voltage max | 28 |
| Output voltage min | 24 |
| Power Consumption At 120 V AC | 2.17 |
| Power Consumption At 230 V AC | 1.14 |
| Power Factor at 120 V AC, full load. Typical | 0.99 |
| Power Factor at 230 V AC, full load. Typical | 0.97 |
| Power Reduction Of 60 To 70 ° C | 6 |
| Ripple. max | 50 |
| Series | Dimension C |
| Supply Frequency | 50-60 ±6 % |

| | |
|---|---|
| Temperature Range Without Derating From | -25 |
| Temperature Range Without Derating To | 60 |
| Weight | 0.6 |
| Width | 39 |

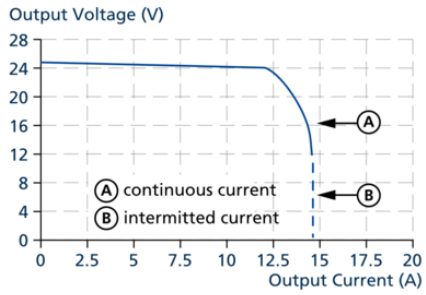


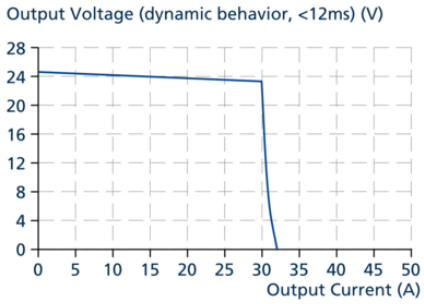


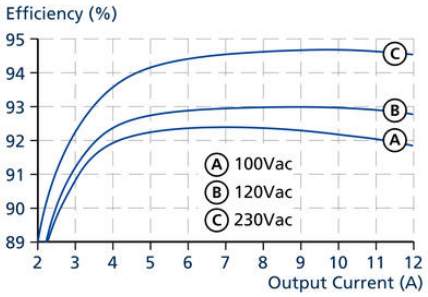


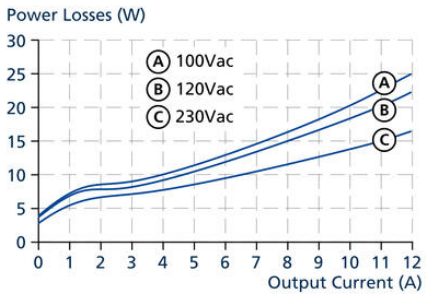


Maximal wire length*) for a fast (magnetic) tripping:

| | 0.75mm² | 1.0mm² | 1.5mm² | 2.5mm² |
|---|---|---|---|---|
| C-2A | 30 m | 37 m | 54 m | 84 m |
| C-3A | 25 m | 30 m | 46 m | 69 m |
| C-4A | 9 m | 15 m | 25 m | 34 m |
| C-6A | 3 m | 3 m | 4 m | 7 m |
| C-8A | | | | |
| B-6A | 12 m | 15 m | 21 m | 34 m |
| B-10A | 3 m | 3 m | 4 m | 9 m |
| B-13A | 2 m | 2 m | 3 m | 6 m |

*) Don't forget to consider twice the distance to the load (or cable length) when calculating the total wire length (+ and – wire).

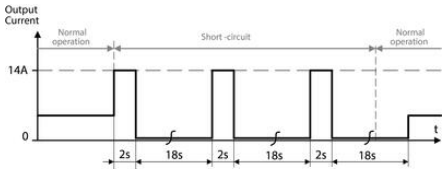


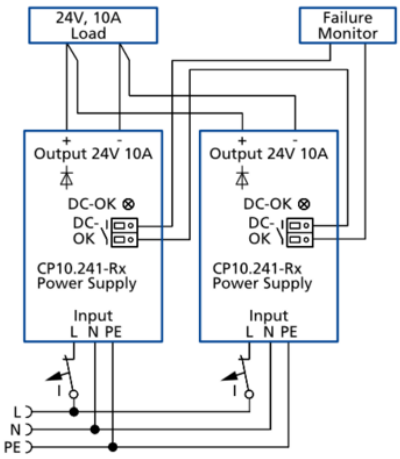


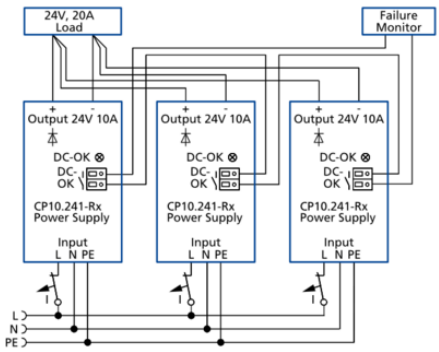


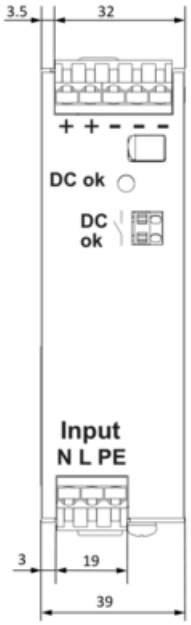

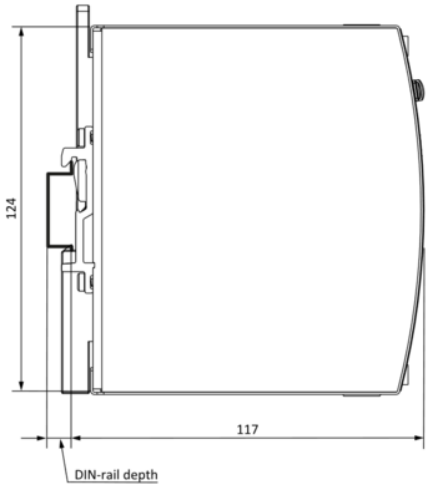
124
117
DIN-rail depth